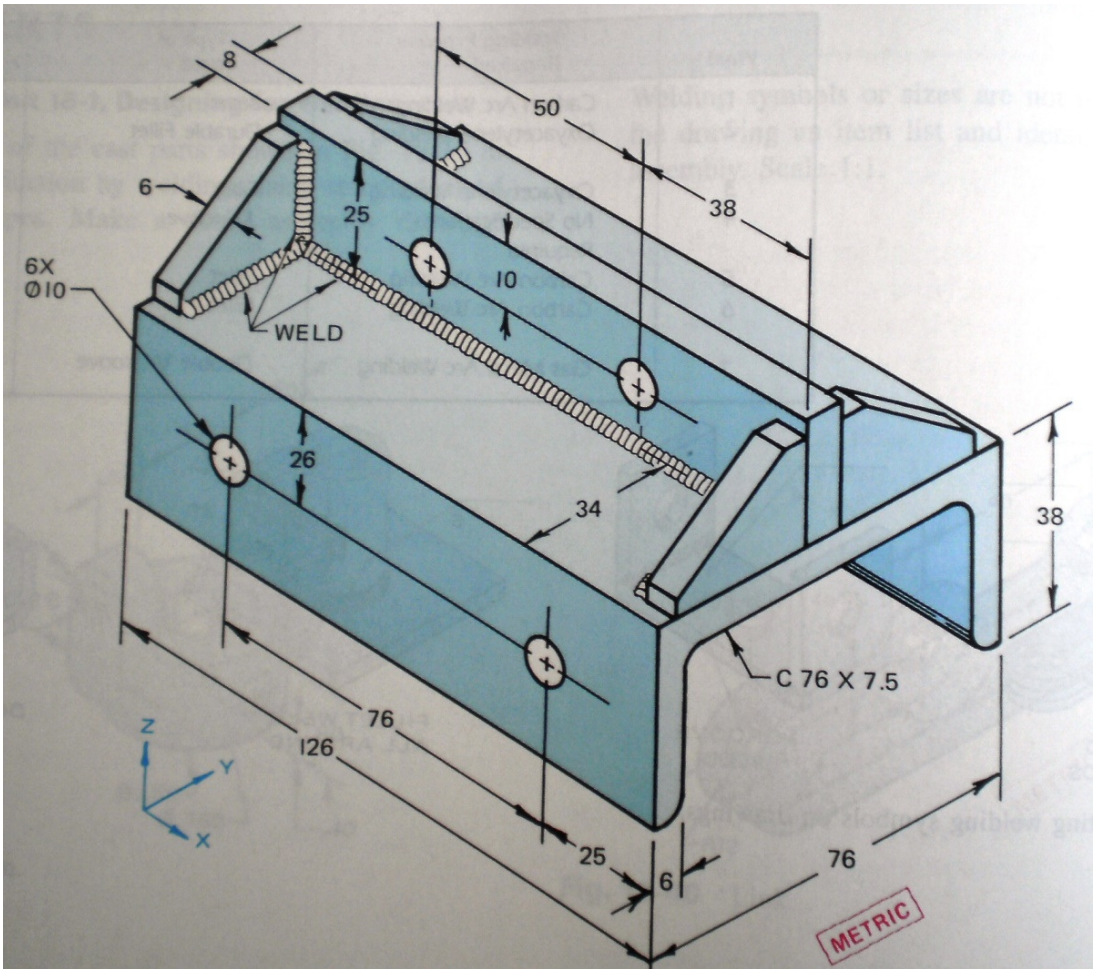

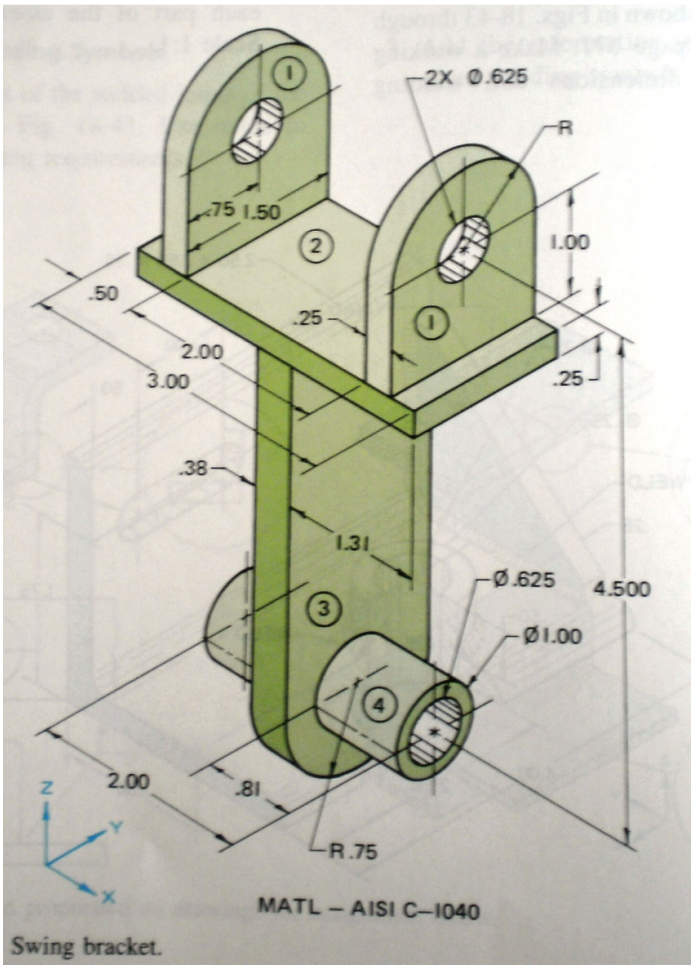

Swing bracket.