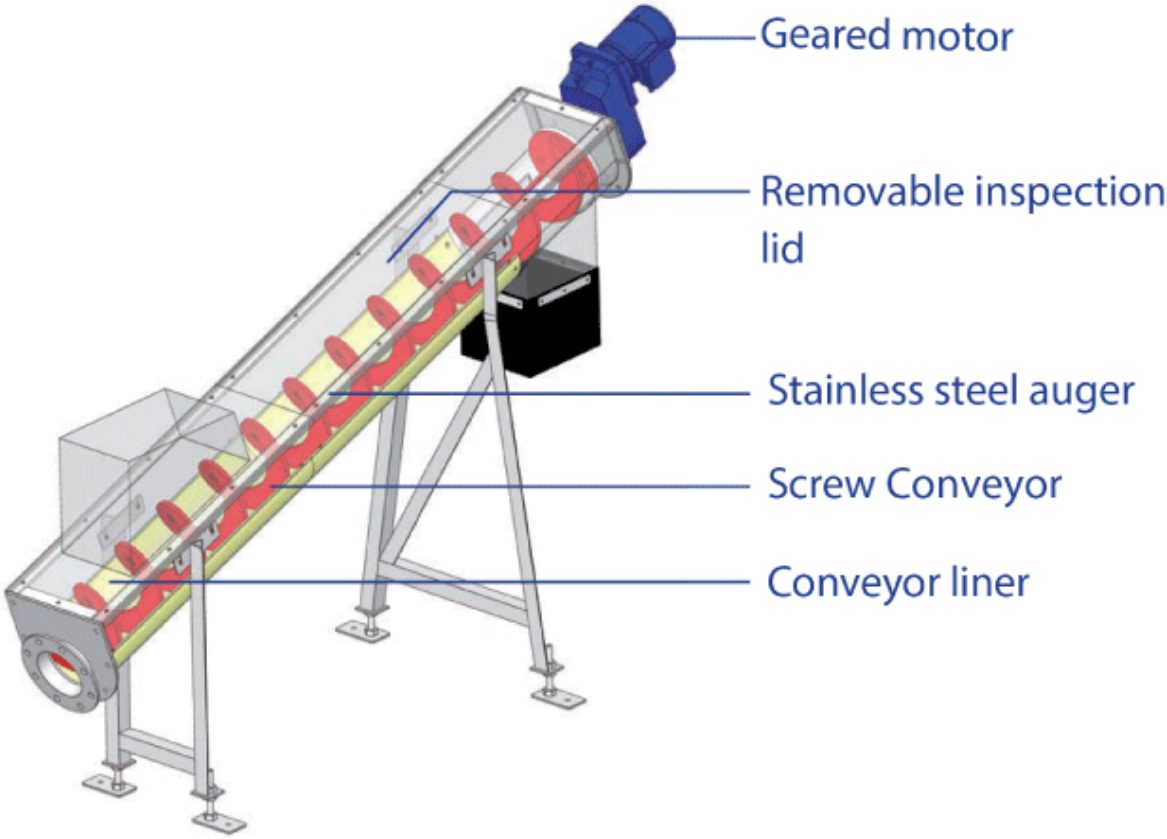
Geared motor
Removable inspection lid
Stainless steel auger
Screw Conveyor
Conveyor liner

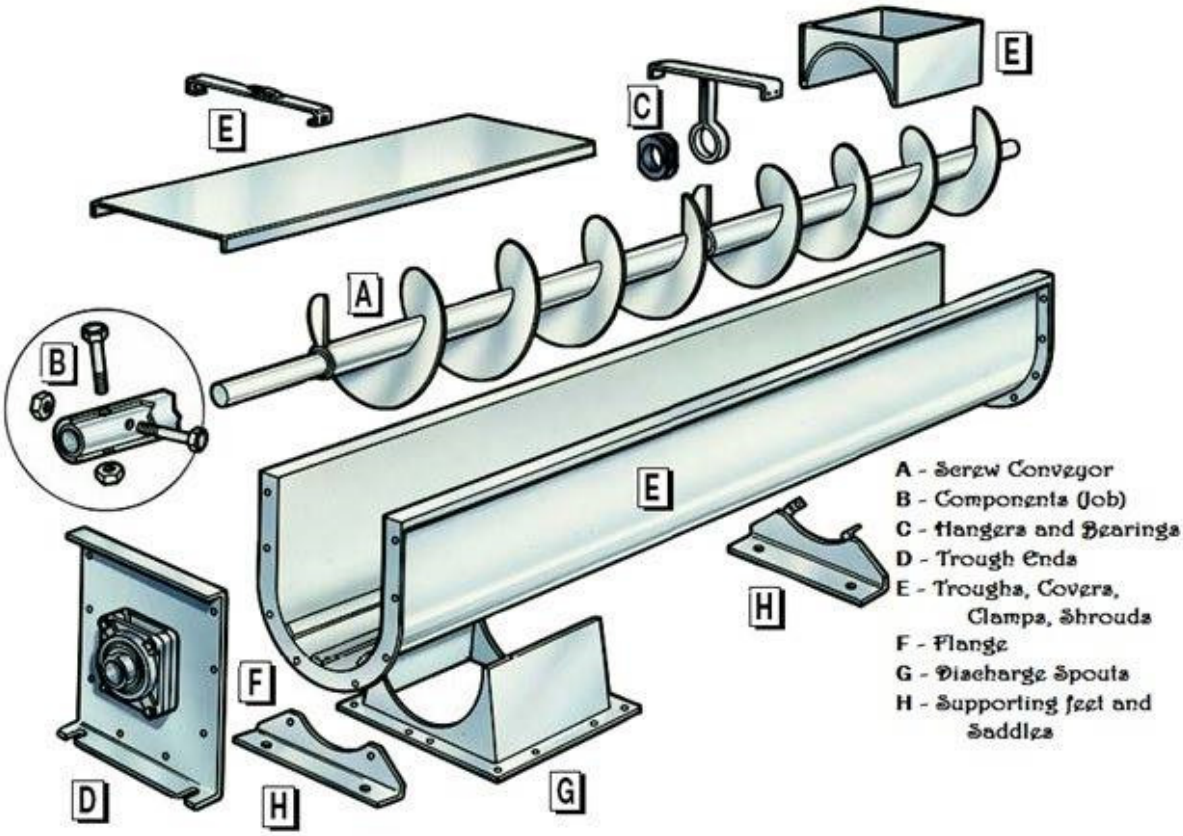
A - Screw Conveyor
B - Components (Job)
C - Hangers and Bearings
D - Trough Ends
E - Troughs, Covers, Clamps, Shrouds
F - Flange
G - Discharge Spouts
H - Supporting feet and Saddles