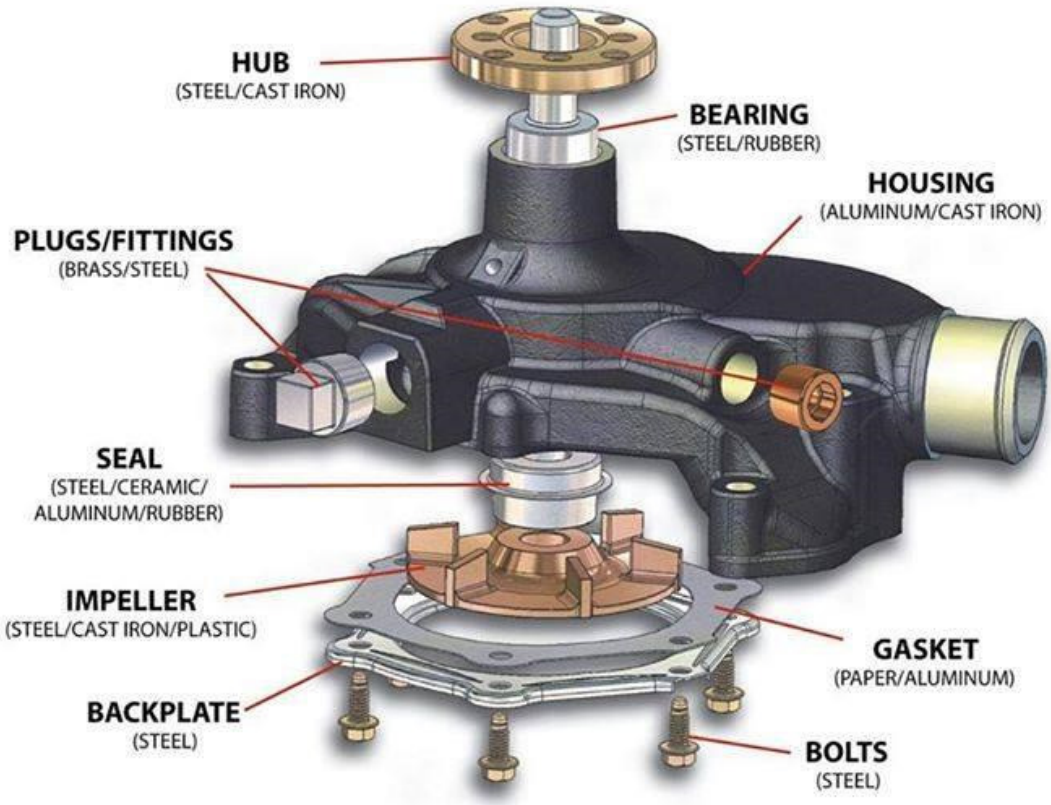
HUB
(STEEL/CAST IRON)
BEARING
(STEEL/RUBBER)
HOUSING
(ALUMINUM/CAST IRON)
PLUGS/FITTINGS
(BRASS/STEEL)
SEAL
(STEEL/CERAMIC/
ALUMINUM/RUBBER)
IMPELLER
(STEEL/CAST IRON/PLASTIC)
GASKET
(PAPER/ALUMINUM)
BACKPLATE
(STEEL)
BOLTS
(STEEL)

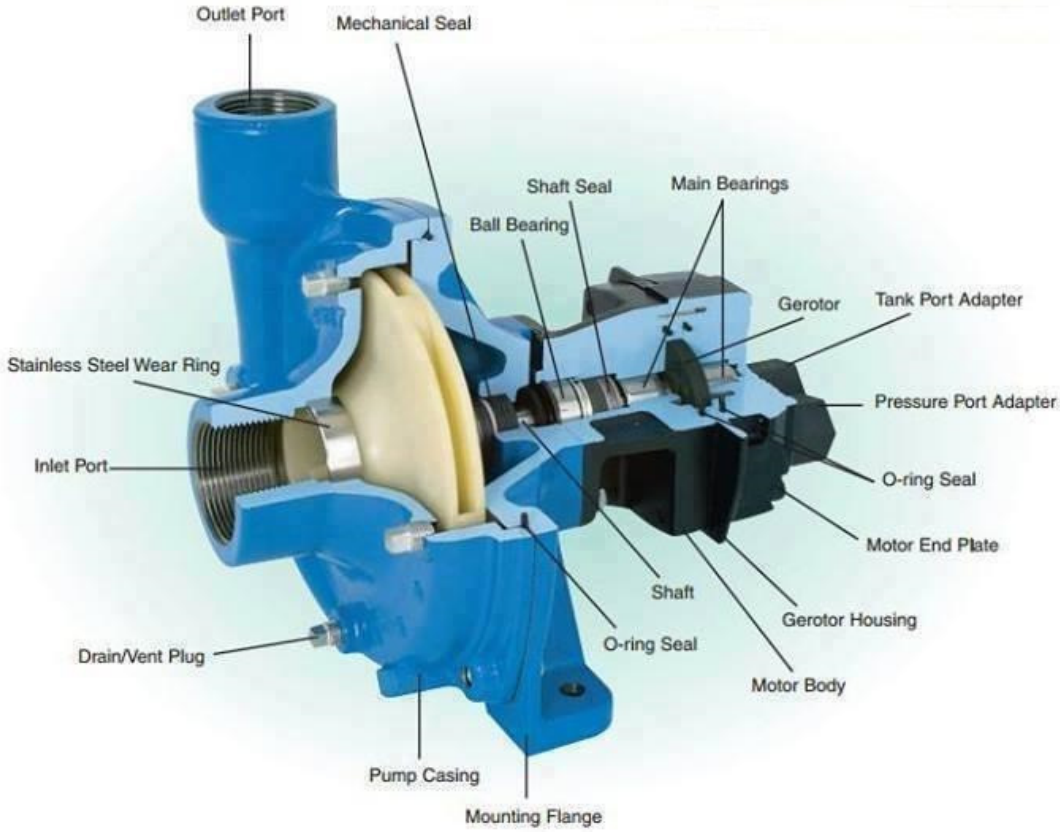
Outlet Port
Mechanical Seal
Shaft Seal
Main Bearings
Ball Bearing
Gerotor
Tank Port Adapter
Stainless Steel Wear Ring
Pressure Port Adapter
Inlet Port
O-ring Seal
Motor End Plate
Shaft
Gerotor Housing
Drain/Vent Plug
O-ring Seal
Motor Body
Pump Casing
Mounting Flange