TUTORIAL PROBLEMS ON DYNAMICS

M. Kemal Özgören

PROBLEM 1

Consider the wheel shown in Figure 1. Its thickness is $2d$ and the radius of its rim is r. Its mass is M and its mass center C is coincident with its geometric center. However, due to some irregularities, the body-fixed frame $\mathcal{F}_1\{C; \vec{u}_1^{(1)}, \vec{u}_2^{(1)}, \vec{u}_3^{(1)}\}$ is not principal. To detect these irregularities and to correct their effects, the following procedure is carried out:

a) The wheel is rotated about the $\vec{u}_1^{(1)} = \vec{u}_1^{(0)}$ axis with a constant angular speed ω. Meanwhile the forces applied on the wheel at the bearings A and B ($CA = CB = b$) are determined experimentally with their body frame components as follows:

$$\vec{F}_A = F_{A2}\,\vec{u}_2^{(1)} + F_{A3}\,\vec{u}_3^{(1)} \ , \qquad \vec{F}_B = F_{B2}\,\vec{u}_2^{(1)} + F_{B3}\,\vec{u}_3^{(1)} \ .$$

Then, the inertia products J_{12} and J_{31} are calculated. In order to make these calculations, express J_{12} and J_{31} in terms of the components of $\vec{F}_A$ and $\vec{F}_B$.

b) As to cancel out the effects of the irregularities, two small blocks each of mass m are attached to the wheel on the opposite sides of its rim at angles ϕ and $(\phi + \pi)$ measured from the $\vec{u}_2^{(1)}$ axis. In other words, the small blocks are attached to the points with the following position vectors:

$$\vec{r}_1 = d\,\vec{u}_1^{(1)} + r[\vec{u}_2^{(1)}\cos\phi + \vec{u}_3^{(1)}\sin\phi], \qquad \vec{r}_2 = -\,\vec{r}_1 .$$

Determine the mass m and the angle ϕ in order to have the modified inertia products $J_{12}^* = J_{31}^* = 0$ so that the wheel becomes balanced.

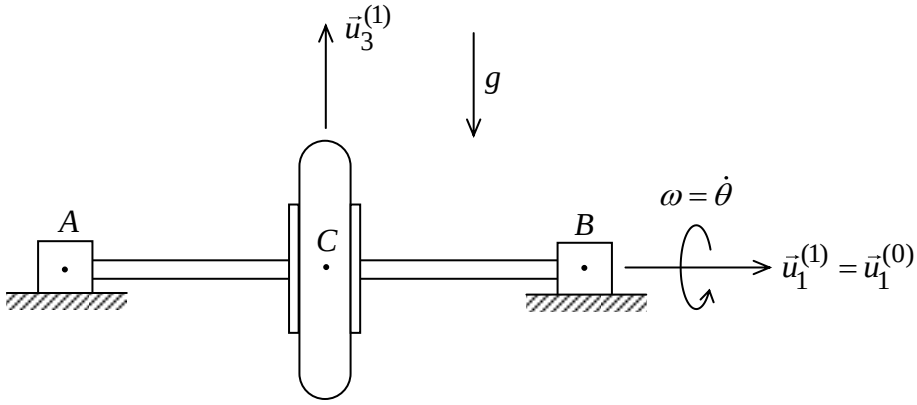

Figure 1

SOLUTION to PROBLEM 1

a)

$$\breve{J}_C \cdot \vec{\alpha} + \vec{\omega} \times \breve{J}_C \cdot \vec{\omega} = \Sigma \vec{M}_C$$

$$\vec{\omega} = \omega \vec{u}_1^{(1)}, \quad \dot{\omega} = 0 \quad \Rightarrow \quad \vec{\alpha} = \vec{0} \quad \Rightarrow \quad \breve{J}_C \cdot \vec{\alpha} = \vec{0}$$

$$\breve{J}_C = \sum_{i=1}^{3} \sum_{j=1}^{3} J_{ij} \vec{u}_i^{(1)} \vec{u}_j^{(1)}$$

$$\breve{J}_C \cdot \vec{\omega} = \omega \breve{J}_C \cdot \vec{u}_1^{(1)} = \omega [J_{11} \vec{u}_1^{(1)} + J_{12} \vec{u}_2^{(1)} + J_{31} \vec{u}_3^{(1)}]$$

$$\vec{\omega} \times \breve{J}_C \cdot \vec{\omega} = \omega^2 [J_{12} \vec{u}_3^{(1)} - J_{31} \vec{u}_2^{(1)}]$$

$$\Sigma \vec{M}_C = \vec{r}_{CA} \times \vec{F}_A + \vec{r}_{CB} \times \vec{F}_B$$

$$\Sigma \vec{M}_C = -b \vec{u}_1^{(1)} \times [F_{A2} \vec{u}_2^{(1)} + F_{A3} \vec{u}_3^{(1)}] + b \vec{u}_1^{(1)} \times [F_{B2} \vec{u}_2^{(1)} + F_{B3} \vec{u}_3^{(1)}]$$

$$\Sigma \vec{M}_C = b(F_{B2} - F_{A2}) \vec{u}_3^{(1)} - b(F_{B3} - F_{A3}) \vec{u}_2^{(1)}$$

$$J_{12} = b(F_{B2} - F_{A2}) / \omega^2, \quad J_{31} = b(F_{B3} - F_{A3}) / \omega^2 .$$

b)

$$\breve{J}_C^* = \breve{J}_C + 2m(r_1^2 \breve{I} - \vec{r}_1 \vec{r}_1)$$

$$J_{ij}^* = \vec{u}_i^{(1)} \cdot \breve{J}_C^* \cdot \vec{u}_j^{(1)} = J_{ij} + 2m(r_1^2 \delta_{ij} - r_{1i} r_{1j})$$

$$\vec{r}_1 = d \vec{u}_1^{(1)} + r[\vec{u}_2^{(1)} \cos\phi + \vec{u}_3^{(1)} \sin\phi]$$

$$J_{12}^* = 0 = J_{12} - 2mdr\cos\phi \quad \Rightarrow \quad m\cos\phi = J_{12} / (2dr)$$

$$J_{31}^* = 0 = J_{31} - 2mdr\sin\phi \quad \Rightarrow \quad m\sin\phi = J_{31} / (2dr)$$

$$m = \sqrt{J_{12}^2 + J_{31}^2} / (2dr)$$

$$\phi = \mathrm{atan}_2(J_{31}, J_{12})$$

PROBLEM 2

Consider the system shown in Figure 2. While the wheel (body 2) is spinning at a constant rate ω_s, the shaft *AB* (body 1) is being raised up so that $\theta = \theta(t)$ is a specified function of time. This motion of the shaft is achieved by a torque *T* applied at the revolute joint *A*. The mass of the shaft is negligible. Its length is $b = AB$. The mass of the wheel is *m* and its inertia dyadic about its mass center *B* is expressed in the frame of the shaft as

$$\breve{J}_B = J_n \vec{u}_1^{(1)} \vec{u}_1^{(1)} + J_s \vec{u}_2^{(1)} \vec{u}_2^{(1)} + J_n \vec{u}_3^{(1)} \vec{u}_3^{(1)} .$$

Determine the torque *T* together with the components of the reaction forces and moments at the bearings *A* and *B* in the frame of the shaft.

Hint: Write the Newton-Euler equations for both the wheel and the shaft.

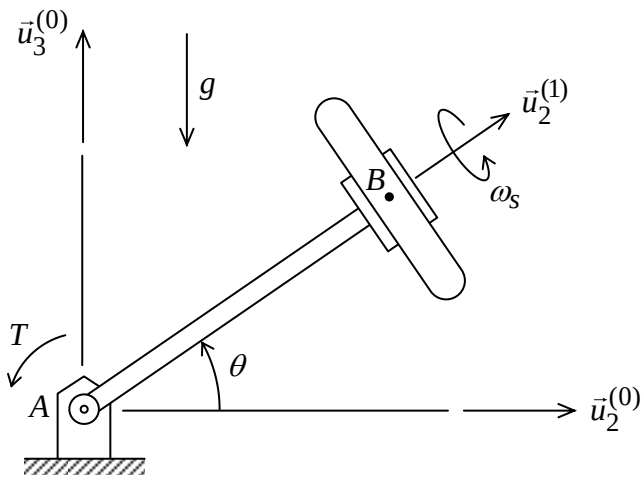

Figure 2

<u>SOLUTION to PROBLEM 2</u>

Newton-Euler Equations for the wheel:

$$m\vec{a}_B = \Sigma\vec{F} = m\vec{g} + \vec{F}_{12}$$

$$\breve{J}_B \cdot \vec{\alpha}_2 + \vec{\omega}_2 \times \breve{J}_B \cdot \vec{\omega}_2 = \Sigma\vec{M}_B = \vec{M}_{12}$$

$$\vec{\omega}_2 = \vec{\omega}_{2/0} = \vec{\omega}_{2/1} + \vec{\omega}_{1/0} = \omega_s\vec{u}_2^{(1)} + \dot{\theta}\vec{u}_1^{(1)}$$

$$\vec{\alpha}_2 = D_0\vec{\omega}_2 = D_1\vec{\omega}_2 + \vec{\omega}_1 \times \vec{\omega}_2 = \ddot{\theta}\vec{u}_1^{(1)} + \omega_s\dot{\theta}\vec{u}_3^{(1)}$$

$$\vec{a}_B = D_0^2\vec{r}_B = bD_0^2\vec{u}_2^{(1)} = b\{\vec{\alpha}_1 \times \vec{u}_2^{(1)} + \vec{\omega}_1 \times [\vec{\omega}_1 \times \vec{u}_2^{(1)}]\}$$

$$\vec{a}_B = b[\ddot{\theta}\vec{u}_3^{(1)} - \dot{\theta}^2\vec{u}_2^{(1)}]$$

$$mb[\ddot{\theta}\vec{u}_3^{(1)} - \dot{\theta}^2\vec{u}_2^{(1)}] = -mg\vec{u}_3^{(0)} + F_{121}\vec{u}_1^{(1)} + F_{122}\vec{u}_2^{(1)} + F_{123}\vec{u}_3^{(1)}$$

$$\vec{u}_3^{(0)} = \vec{u}_3^{(1)}\cos\theta + \vec{u}_2^{(1)}\sin\theta$$

$$F_{121} = 0, \quad F_{122} = mg\sin\theta - mb\dot{\theta}^2, \quad F_{123} = mg\cos\theta + mb\ddot{\theta}$$

$$\breve{J}_B \cdot \vec{\alpha}_2 + \vec{\omega}_2 \times \breve{J}_B \cdot \vec{\omega}_2 = \Sigma\vec{M}_B = \vec{M}_{12}$$

$$\breve{J}_B = J_n\vec{u}_1^{(1)}\vec{u}_1^{(1)} + J_s\vec{u}_2^{(1)}\vec{u}_2^{(1)} + J_n\vec{u}_3^{(1)}\vec{u}_3^{(1)}$$

$$\breve{J}_B \cdot \vec{\alpha}_2 = J_n\ddot{\theta}\vec{u}_1^{(1)} + J_n\omega_s\dot{\theta}\vec{u}_3^{(1)}$$

$$\breve{J}_B \cdot \vec{\omega}_2 = J_s\omega_s\vec{u}_2^{(1)} + J_n\dot{\theta}\vec{u}_1^{(1)}$$

$$\vec{\omega}_2 \times \breve{J}_B \cdot \vec{\omega}_2 = [\omega_s\vec{u}_2^{(1)} + \dot{\theta}\vec{u}_1^{(1)}] \times [J_s\omega_s\vec{u}_2^{(1)} + J_n\dot{\theta}\vec{u}_1^{(1)}]$$

$$\vec{\omega}_2 \times \breve{J}_B \cdot \vec{\omega}_2 = (J_s - J_n)\omega_s\dot{\theta}\vec{u}_3^{(1)}$$

$$J_n\ddot{\theta}\vec{u}_1^{(1)} + J_s\omega_s\dot{\theta}\vec{u}_3^{(1)} = M_{121}\vec{u}_1^{(1)} + M_{123}\vec{u}_3^{(1)}$$

$$M_{121} = J_n\ddot{\theta}, \quad M_{122} \equiv 0, \quad M_{123} = J_s\omega_s\dot{\theta}$$

Newton-Euler equations for the shaft ($m_s \approx 0,\ \breve{J}_G \approx \breve{0}$):

$$m_s \vec{a}_G = \vec{0} = \Sigma \vec{F} = m_s \vec{g} + \vec{F}_{01} + \vec{F}_{21} \quad \Rightarrow \quad \vec{F}_{01} = \vec{F}_{12}$$

$$F_{011} = F_{121} = 0, \quad F_{012} = F_{122}, \quad F_{013} = F_{123}$$

$$\breve{J}_G \cdot \vec{\alpha}_1 + \vec{\omega}_1 \times \breve{J}_G \cdot \vec{\omega}_1 = \vec{0} = \Sigma \vec{M}_G = \vec{M}_{01} + \vec{M}_{21} + \vec{r}_{GA} \times \vec{F}_{01} + \vec{r}_{GB} \times \vec{F}_{21}$$

$$\vec{M}_{01} + \vec{r}_{GA} \times \vec{F}_{01} = \vec{M}_{12} + \vec{r}_{GB} \times \vec{F}_{12}$$

$$T\,\vec{u}_1^{(1)} + M_{012}\vec{u}_2^{(1)} + M_{013}\vec{u}_3^{(1)} - (b/2)\vec{u}_2^{(1)} \times [F_{012}\vec{u}_2^{(1)} + F_{013}\vec{u}_3^{(1)}]$$

$$= M_{121}\vec{u}_1^{(1)} + M_{123}\vec{u}_3^{(1)} + (b/2)\vec{u}_2^{(1)} \times [F_{122}\vec{u}_2^{(1)} + F_{123}\vec{u}_3^{(1)}]$$

$$T\,\vec{u}_1^{(1)} + M_{012}\vec{u}_2^{(1)} + M_{013}\vec{u}_3^{(1)} - (bF_{013}/2)\vec{u}_1^{(1)}$$

$$= M_{121}\vec{u}_1^{(1)} + M_{123}\vec{u}_3^{(1)} + (bF_{123}/2)\vec{u}_1^{(1)}$$

$$T = M_{121} + (b/2)(F_{013} + F_{123}), \quad M_{012} = 0, \quad M_{013} = M_{123}$$

$$T = J_n\ddot{\theta} + b(mg\cos\theta + mb\ddot{\theta}) = (J_n + mb^2)\ddot{\theta} + mgb\cos\theta$$

PROBLEM 3

The rigid body shown in Figure 3 consists of three balls connected by thin rigid bars. The mass of each ball is 10 kg. The radii of the balls are small compared to the overall size of the rigid body. The masses of the bars are negligible and their lengths are such that OA = 0.6 m and OB = 0.3 m.

a) Express the inertia dyadic $\breve{J}_O$ of the rigid body in the frame $\mathcal{F}_b(O) = \mathcal{F}_b(O; \vec{u}_1, \vec{u}_2, \vec{u}_3)$, i.e. express it in terms of the dyads formed by $\vec{u}_1$, $\vec{u}_2$, and $\vec{u}_3$. Show that $\mathcal{F}_b(O)$ is principal for $\breve{J}_O$, i.e. the matrix representation of $\breve{J}_O$ in $\mathcal{F}_b(O)$ is diagonal.

b) Determine the mass center C of the rigid body. Then, express $\breve{J}_C$ in the frame $\mathcal{F}_b(C)$, which is parallel to $\mathcal{F}_b(O)$. That is, express $\breve{J}_C$ also in terms of the dyads formed by $\vec{u}_1$, $\vec{u}_2$, and $\vec{u}_3$. Show that $\mathcal{F}_b(C)$ is *not* principal for $\breve{J}_C$, i.e. the matrix representation of $\breve{J}_C$ in $\mathcal{F}_b(C)$ is not diagonal.

c) Determine the principal frame $\mathcal{F}_p(C)$ for $\breve{J}_C$, which deviates least from $\mathcal{F}_b(C)$. Meanwhile, determine the *principal moments of inertia* as well.

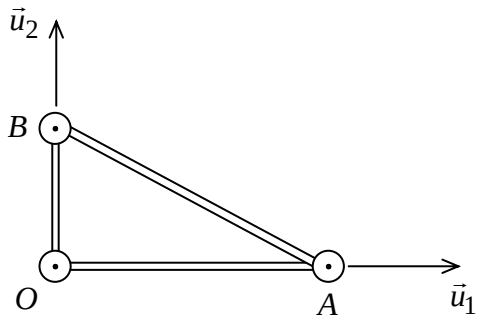

Figure 3

SOLUTION to PROBLEM 3

a)

$$\breve{J}_O = m_A(r_{OA}^2\breve{I} - \vec{r}_{OA}\vec{r}_{OA}) + m_B(r_{OB}^2\breve{I} - \vec{r}_{OB}\vec{r}_{OB})$$
$$\breve{J}_O = 10[0.36(\vec{u}_1\vec{u}_1 + \vec{u}_2\vec{u}_2 + \vec{u}_3\vec{u}_3) - 0.36\vec{u}_1\vec{u}_1]$$
$$+10[0.09(\vec{u}_1\vec{u}_1 + \vec{u}_2\vec{u}_2 + \vec{u}_3\vec{u}_3) - 0.09\vec{u}_2\vec{u}_2] \ (\mathrm{kg}\cdot\mathrm{m}^2)$$
$$\breve{J}_O = 0.9\vec{u}_1\vec{u}_1 + 3.6\vec{u}_2\vec{u}_2 + 4.5\vec{u}_3\vec{u}_3 \ (\mathrm{kg}\cdot\mathrm{m}^2)$$

b)

$$\vec{r}_{OC} = (m_A\vec{r}_{OA} + m_B\vec{r}_{OB})/(m_O + m_A + m_B) = (6\vec{u}_1 + 3\vec{u}_2)/30 \ (\mathrm{m})$$
$$\vec{r}_{OC} = 0.2\vec{u}_1 + 0.1\vec{u}_2 \ (\mathrm{m})$$

$$\breve{J}_C = m_O(r_{CO}^2\breve{I} - \vec{r}_{CO}\vec{r}_{CO}) + m_A(r_{CA}^2\breve{I} - \vec{r}_{CA}\vec{r}_{CA}) + m_B(r_{CB}^2\breve{I} - \vec{r}_{CB}\vec{r}_{CB})$$
$$\vec{r}_{CO} = -(0.2\vec{u}_1 + 0.1\vec{u}_2)$$
$$\vec{r}_{CA} = \vec{r}_{CO} + \vec{r}_{OA} = 0.4\vec{u}_1 - 0.1\vec{u}_2$$
$$\vec{r}_{CB} = \vec{r}_{CO} + \vec{r}_{OB} = -0.2\vec{u}_1 + 0.2\vec{u}_2$$
$$\breve{J}_C = 10[0.05(\vec{u}_1\vec{u}_1 + \vec{u}_2\vec{u}_2 + \vec{u}_3\vec{u}_3) - (0.04\vec{u}_1\vec{u}_1 + 0.01\vec{u}_2\vec{u}_2 + 0.02\vec{u}_1\vec{u}_2 + 0.02\vec{u}_2\vec{u}_1)]$$
$$+10[0.17(\vec{u}_1\vec{u}_1 + \vec{u}_2\vec{u}_2 + \vec{u}_3\vec{u}_3) - (0.16\vec{u}_1\vec{u}_1 + 0.01\vec{u}_2\vec{u}_2 - 0.04\vec{u}_1\vec{u}_2 - 0.04\vec{u}_2\vec{u}_1)]$$
$$+10[0.08(\vec{u}_1\vec{u}_1 + \vec{u}_2\vec{u}_2 + \vec{u}_3\vec{u}_3) - (0.04\vec{u}_1\vec{u}_1 + 0.04\vec{u}_2\vec{u}_2 - 0.04\vec{u}_1\vec{u}_2 - 0.04\vec{u}_2\vec{u}_1)]$$
$$\breve{J}_C = 0.5(\vec{u}_1\vec{u}_1 + \vec{u}_2\vec{u}_2 + \vec{u}_3\vec{u}_3) - (0.4\vec{u}_1\vec{u}_1 + 0.1\vec{u}_2\vec{u}_2 + 0.2\vec{u}_1\vec{u}_2 + 0.2\vec{u}_2\vec{u}_1)$$
$$+1.7(\vec{u}_1\vec{u}_1 + \vec{u}_2\vec{u}_2 + \vec{u}_3\vec{u}_3) - (1.6\vec{u}_1\vec{u}_1 + 0.1\vec{u}_2\vec{u}_2 - 0.4\vec{u}_1\vec{u}_2 - 0.4\vec{u}_2\vec{u}_1)$$
$$+0.8(\vec{u}_1\vec{u}_1 + \vec{u}_2\vec{u}_2 + \vec{u}_3\vec{u}_3) - (0.4\vec{u}_1\vec{u}_1 + 0.4\vec{u}_2\vec{u}_2 - 0.4\vec{u}_1\vec{u}_2 - 0.4\vec{u}_2\vec{u}_1)$$
$$\breve{J}_C = 0.1\vec{u}_1\vec{u}_1 + 0.4\vec{u}_2\vec{u}_2 + 0.5\vec{u}_3\vec{u}_3 - 0.2\vec{u}_1\vec{u}_2 - 0.2\vec{u}_2\vec{u}_1$$
$$+0.1\vec{u}_1\vec{u}_1 + 1.6\vec{u}_2\vec{u}_2 + 1.7\vec{u}_3\vec{u}_3 + 0.4\vec{u}_1\vec{u}_2 + 0.4\vec{u}_2\vec{u}_1$$
$$+0.4\vec{u}_1\vec{u}_1 + 0.4\vec{u}_2\vec{u}_2 + 0.8\vec{u}_3\vec{u}_3 + 0.4\vec{u}_1\vec{u}_2 + 0.4\vec{u}_2\vec{u}_1$$
$$\breve{J}_C = 0.6\vec{u}_1\vec{u}_1 + 2.4\vec{u}_2\vec{u}_2 + 3.0\vec{u}_3\vec{u}_3 + 0.6\vec{u}_1\vec{u}_2 + 0.6\vec{u}_2\vec{u}_1 \ (\mathrm{kg}\cdot\mathrm{m}^2)$$

c)

$$\hat{J}_C^{(b)} = \hat{C}^{(b,p)}\hat{J}_C^{(p)}\hat{C}^{(p,b)}$$
$$\hat{C}^{(b,p)} = \hat{R}_3(\theta)$$

$$\begin{bmatrix} 0.6 & 0.6 & 0 \\ 0.6 & 2.4 & 0 \\ 0 & 0 & 3.0 \end{bmatrix} = \begin{bmatrix} c\theta & -s\theta & 0 \\ s\theta & c\theta & 0 \\ 0 & 0 & 1 \end{bmatrix} \begin{bmatrix} J_1^* & 0 & 0 \\ 0 & J_2^* & 0 \\ 0 & 0 & J_3^* \end{bmatrix} \begin{bmatrix} c\theta & s\theta & 0 \\ -s\theta & c\theta & 0 \\ 0 & 0 & 1 \end{bmatrix}$$

$$\begin{bmatrix} 0.6 & 0.6 & 0 \\ 0.6 & 2.4 & 0 \\ 0 & 0 & 3.0 \end{bmatrix} = \begin{bmatrix} J_1^*c\theta & -J_2^*s\theta & 0 \\ J_1^*s\theta & J_2^*c\theta & 0 \\ 0 & 0 & J_3^* \end{bmatrix} \begin{bmatrix} c\theta & s\theta & 0 \\ -s\theta & c\theta & 0 \\ 0 & 0 & 1 \end{bmatrix}$$

$$\begin{bmatrix} 0.6 & 0.6 & 0 \\ 0.6 & 2.4 & 0 \\ 0 & 0 & 3.0 \end{bmatrix} = \begin{bmatrix} J_1^* c^2\theta + J_2^* s^2\theta & (J_1^* - J_2^*)s\theta c\theta & 0 \\ (J_1^* - J_2^*)s\theta c\theta & J_1^* s^2\theta + J_2^* c^2\theta & 0 \\ 0 & 0 & J_3^* \end{bmatrix}$$

It is already seen that $J_3^* = 3.0 \ \text{kg}\cdot\text{m}^2$. For the others, we want $J_1^* < J_2^* < J_3^*$. So,

$$(J_2^* - J_1^*)s\theta c\theta = -0.6 \quad \Rightarrow \quad (J_2^* - J_1^*)\sin(2\theta) = -1.2$$
$$J_1^* c^2\theta + J_2^* s^2\theta = J_1^* + (J_2^* - J_1^*)s^2\theta = 0.6$$
$$J_1^* s^2\theta + J_2^* c^2\theta = J_1^* + (J_2^* - J_1^*)c^2\theta = 2.4$$
$$J_1^* + J_2^* = 2.4 + 0.6 = 3.0$$
$$(J_2^* - J_1^*)(c^2\theta - s^2\theta) = 2.4 - 0.6 = 1.8 \quad \Rightarrow \quad (J_2^* - J_1^*)\cos(2\theta) = 1.8$$

Hence,

$$J_2^* - J_1^* = \sqrt{(1.8)^2 + (1.2)^2} = 2.1633$$
$$2\theta = \tan^{-1}(-1.2/1.8) \quad \Rightarrow \quad \theta = -16.845^\circ$$
$$J_2^* = (3.0 + 2.1633)/2 = 2.58165 \ \text{kg}\cdot\text{m}^2$$
$$J_1^* = (3.0 - 2.1633)/2 = 0.41835 \ \text{kg}\cdot\text{m}^2$$

PROBLEM 4

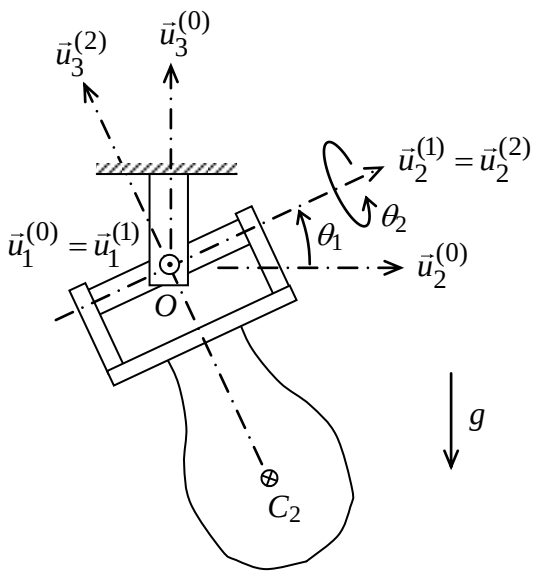

The figure shows a double-pivot pendulum. The axis of the first pivot between $\mathcal{F}_0$ and $\mathcal{F}_1$ is along $\vec{u}_1^{(0)} = \vec{u}_1^{(1)}$ and the axis of the second pivot between $\mathcal{F}_1$ and $\mathcal{F}_2$ is along $\vec{u}_2^{(1)} = \vec{u}_2^{(2)}$. $\mathcal{F}_1$ and $\mathcal{F}_2$ become coincident with $\mathcal{F}_0$ when $\theta_1 = \theta_2 = 0$. The mass of the link (body 1) between the fixed support and the pendulum (body 2) is negligible. The mass of the pendulum is m_2 and its inertia tensor about the point O (the common center of the pivots) is

$$\breve{J}_O = J_1\vec{u}_1^{(2)}\vec{u}_1^{(2)} + J_2\vec{u}_2^{(2)}\vec{u}_2^{(2)} + J_3\vec{u}_3^{(2)}\vec{u}_3^{(2)}.$$

M. K. Özgören

Note that, since O is a fixed point, the Euler's equations can be written in this case more conveniently about point O.

a) Obtain the differential equations for the angles θ_1 and θ_2.

b) As a by product, obtain also the moment reaction $\vec{M}_{01}$ as expressed in $\mathcal{F}_1$.

<u>SOLUTION to PROBLEM 4</u>

For body 2, the Euler's equation about point O is

$$\breve{J}_O \cdot \vec{\alpha}_2 + \vec{\omega}_2 \times \breve{J}_O \cdot \vec{\omega}_2 = \Sigma \vec{M}_O = \vec{M}_{12} + [-c_2 \vec{u}_3^{(2)}] \times [-m_2 g \vec{u}_3^{(0)}].$$

Here,

$$\vec{\omega}_2 = \dot{\theta}_1 \vec{u}_1^{(1)} + \dot{\theta}_2 \vec{u}_2^{(2)}.$$

$$\bar{u}_1^{(1/2)} = \hat{C}^{(2,1)} \bar{u}_1^{(1/1)} = e^{-\tilde{u}_2 \theta_2} \bar{u}_1 = \bar{u}_1 c\theta_2 + \bar{u}_3 s\theta_2,$$

$$\bar{u}_3^{(1/2)} = \hat{C}^{(2,1)} \bar{u}_3^{(1/1)} = e^{-\tilde{u}_2 \theta_2} \bar{u}_3 = \bar{u}_3 c\theta_2 - \bar{u}_1 s\theta_2.$$

$$\bar{u}_3^{(0/2)} = \hat{C}^{(2,0)} \bar{u}_3^{(0/0)} = e^{-\tilde{u}_2 \theta_2} e^{-\tilde{u}_1 \theta_1} \bar{u}_3 = \bar{u}_3 c\theta_2 c\theta_1 + \bar{u}_2 s\theta_1 - \bar{u}_1 s\theta_2 c\theta_1.$$

$$\vec{\omega}_2 = \vec{u}_1^{(2)} \dot{\theta}_1 c\theta_2 + \vec{u}_2^{(2)} \dot{\theta}_2 + \vec{u}_3^{(2)} \dot{\theta}_1 s\theta_2.$$

$$\vec{\alpha}_2 = D_2 \vec{\omega}_2 = \vec{u}_1^{(2)} (\ddot{\theta}_1 c\theta_2 - \dot{\theta}_1 \dot{\theta}_2 s\theta_2) + \vec{u}_2^{(2)} \ddot{\theta}_2 + \vec{u}_3^{(2)} (\ddot{\theta}_1 s\theta_2 + \dot{\theta}_1 \dot{\theta}_2 c\theta_2).$$

$$\vec{M}_{12} = M_{121} \vec{u}_1^{(2)} + M_{123} \vec{u}_3^{(2)}.$$

$$\breve{J}_O \cdot \vec{\alpha}_2 = \vec{u}_1^{(2)} J_1 (\ddot{\theta}_1 c\theta_2 - \dot{\theta}_1 \dot{\theta}_2 s\theta_2) + \vec{u}_2^{(2)} J_2 \ddot{\theta}_2 + \vec{u}_3^{(2)} J_3 (\ddot{\theta}_1 s\theta_2 + \dot{\theta}_1 \dot{\theta}_2 c\theta_2).$$

$$\breve{J}_O \cdot \vec{\omega}_2 = \vec{u}_1^{(2)} J_1 \dot{\theta}_1 c\theta_2 + \vec{u}_2^{(2)} J_2 \dot{\theta}_2 + \vec{u}_3^{(2)} J_3 \dot{\theta}_1 s\theta_2,$$

$$\vec{\omega}_2 \times \breve{J}_O \cdot \vec{\omega}_2 = \vec{u}_1^{(2)} (J_3 - J_2) \dot{\theta}_1 \dot{\theta}_2 s\theta_2 + \vec{u}_2^{(2)} (J_1 - J_3) \dot{\theta}_1^2 s\theta_2 c\theta_2 + \vec{u}_3^{(2)} (J_2 - J_1) \dot{\theta}_1 \dot{\theta}_2 c\theta_2.$$

$$\vec{u}_3^{(2)} \times \vec{u}_3^{(0)} = \vec{u}_3^{(2)} \times [\vec{u}_3^{(2)} c\theta_2 c\theta_1 + \vec{u}_2^{(2)} s\theta_1 - \vec{u}_1^{(2)} s\theta_2 c\theta_1] = -\vec{u}_1^{(2)} s\theta_1 - \vec{u}_2^{(2)} s\theta_2 c\theta_1.$$

Hence,

$$J_1 (\ddot{\theta}_1 c\theta_2 - \dot{\theta}_1 \dot{\theta}_2 s\theta_2) + (J_3 - J_2) \dot{\theta}_1 \dot{\theta}_2 s\theta_2 = M_{121} - m_2 g c_2 s\theta_1, \quad (1)$$

$$J_2 \ddot{\theta}_2 + (J_1 - J_3) \dot{\theta}_1^2 s\theta_2 c\theta_2 = -m_2 g c_2 c\theta_1 s\theta_2, \quad (2)$$

$$J_3 (\ddot{\theta}_1 s\theta_2 + \dot{\theta}_1 \dot{\theta}_2 c\theta_2) + (J_2 - J_1) \dot{\theta}_1 \dot{\theta}_2 c\theta_2 = M_{123}. \quad (3)$$

As for body 1,

$$\Sigma \vec{M}_O = \vec{M}_{01} + \vec{M}_{21} = \vec{0} \quad \rightarrow \quad \vec{M}_{01} = \vec{M}_{12},$$

$$M_{012} \vec{u}_2^{(1)} + M_{013} \vec{u}_3^{(1)} = M_{012} \vec{u}_2^{(2)} + M_{013} [\vec{u}_3^{(2)} c\theta_2 - \vec{u}_1^{(2)} s\theta_2] = M_{121} \vec{u}_1^{(2)} + M_{123} \vec{u}_3^{(2)},$$

$$M_{012} = 0, \quad M_{123} = M_{013} c\theta_2, \quad M_{121} = -M_{013} s\theta_2;$$

M. K. Özgören

The last two equations can be combined as

$$M_{123}s\theta_2 + M_{121}c\theta_2 = 0\,, \tag{4}$$

$$M_{013} = M_{123}c\theta_2 - M_{121}s\theta_2\,. \tag{5}$$

As noted above, Eq. (2) is already a differential equation of motion. The second differential equation of motion can be obtained by substituting Eqs. (1) and (3) into Eq. (4):

$$\begin{aligned}&[J_3(\ddot{\theta}_1 s\theta_2 + \dot{\theta}_1\dot{\theta}_2 c\theta_2) + (J_2 - J_1)\dot{\theta}_1\dot{\theta}_2 c\theta_2]s\theta_2\\ &+[J_1(\ddot{\theta}_1 c\theta_2 - \dot{\theta}_1\dot{\theta}_2 s\theta_2) + (J_3 - J_2)\dot{\theta}_1\dot{\theta}_2 s\theta_2 + m_2 g c_2 s\theta_1]c\theta_2 = 0,\end{aligned}$$

$$(J_1 c^2\theta_2 + J_3 s^2\theta_2)\ddot{\theta}_1 = 2(J_1 - J_3)\dot{\theta}_1\dot{\theta}_2 s\theta_2 c\theta_2 - m_2 g c_2 s\theta_1 c\theta_2\,. \tag{6}$$

Finally, the required moment component can be obtained by substituting Eqs. (1) and (3) into Eq. (5):

$$\begin{aligned}M_{013} = &[J_3(\ddot{\theta}_1 s\theta_2 + \dot{\theta}_1\dot{\theta}_2 c\theta_2) + (J_2 - J_1)\dot{\theta}_1\dot{\theta}_2 c\theta_2]c\theta_2\\ &-[J_1(\ddot{\theta}_1 c\theta_2 - \dot{\theta}_1\dot{\theta}_2 s\theta_2) + (J_3 - J_2)\dot{\theta}_1\dot{\theta}_2 s\theta_2 + m_2 g c_2 s\theta_1]s\theta_2\,,\end{aligned}$$

$$M_{013} = (J_3 - J_1)\ddot{\theta}_1 s\theta_2 c\theta_2 + [J_2 + (J_3 - J_1)(c^2\theta_2 - s^2\theta_2)]\dot{\theta}_1\dot{\theta}_2 - m_2 g c_2 s\theta_1 s\theta_2\,. \tag{7}$$

PROBLEM 5

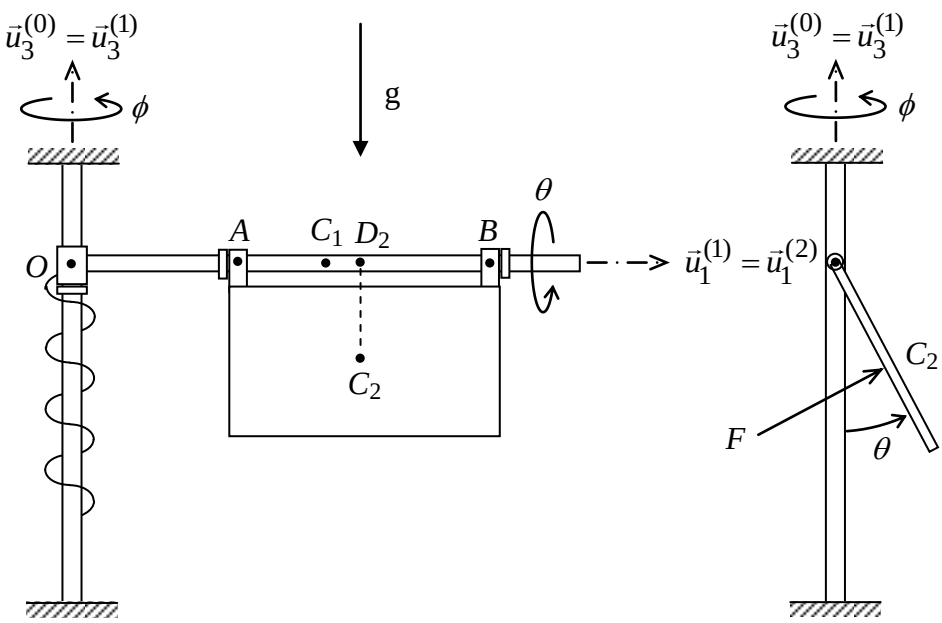

The system shown in the figure consists of a vertical bar (body 0), a horizontal bar (body 1), and a rectangular plate (body 3). The joints between the bodies are revolute. The joint (0,1) is frictionless but it is restrained with a torsional spring of coefficient k_{01}, which is torque-free when $\phi = 0$. The joint (1,2) has two supports at points A and B with $D_2A = D_2B = e_1$. The torsional viscous friction coefficient at the supports is b_{12}. There are two stops on the

horizontal bar and the plate leans against either the right one or the left one. The masses of the horizontal bar and the plate are m_1 and m_2. Their mass centers are located such that $OC_1 = c_1$, $OD_2 = d_2$, and $D_2C_2 = c_2$. Their inertia tensors about their mass centers are

$$\breve{J}_1 = J_1[\vec{u}_2^{(1)}\vec{u}_2^{(1)} + \vec{u}_3^{(1)}\vec{u}_3^{(1)}] \quad \text{and} \quad \breve{J}_2 = J_{21}\vec{u}_1^{(2)}\vec{u}_1^{(2)} + J_{22}\vec{u}_2^{(2)}\vec{u}_2^{(2)} + J_{23}\vec{u}_3^{(2)}\vec{u}_3^{(2)}.$$

The wind load on the plate is represented by the force F applied normally at C_2.

a) Show that $\breve{J}_2$ has the following expression in $\mathcal{F}_1$:

$$\breve{J}_2 = J_{21}\vec{u}_1^{(1)}\vec{u}_1^{(1)} + (J_{22}c^2\theta + J_{23}s^2\theta)\vec{u}_2^{(1)}\vec{u}_2^{(1)} + (J_{22}s^2\theta + J_{23}c^2\theta)\vec{u}_3^{(1)}\vec{u}_3^{(1)}$$
$$+ [(J_{22} - J_{23})s\theta c\theta][\vec{u}_2^{(1)}\vec{u}_3^{(1)} + \vec{u}_3^{(1)}\vec{u}_2^{(1)}].$$

b) In addition to the independent position variables ϕ and θ, identify the independent components (in $\mathcal{F}_1$) of the structural reaction forces and moments.

c) Working in $\mathcal{F}_1$, generate the necessary number of algebraic and differential scalar equations in order to determine ϕ, θ, and the structural reaction components. List these equations *neatly* but do not attempt to solve them.

<u>SOLUTION to PROBLEM 5</u>

a) The required expression is obtained by expressing the basis vectors of $\mathcal{F}_2$ in terms of the basis vectors of $\mathcal{F}_1$ and substituting into the given expression. The basis vectors are related as follows:

$$\vec{u}_1^{(2)} = \vec{u}_1^{(1)}, \quad \vec{u}_2^{(2)} = \vec{u}_2^{(1)}c\theta + \vec{u}_3^{(1)}s\theta, \quad \vec{u}_3^{(2)} = \vec{u}_3^{(1)}c\theta - \vec{u}_2^{(1)}s\theta.$$

b) The independent structural reaction force and moment components are:

$$F_{011}, F_{012}, F_{013}; M_{011}, M_{012}; F_{121}(B), F'_{122}(A), F'_{123}(A), F''_{122}(B), F''_{123}(B).$$

So, together with ϕ and θ, there are 12 unknowns to be determined from the 12 (2×6) scalar Newton-Euler equations.

c) Newton-Euler equations for bodies 1 and 2:

$$m_2\vec{a}_{C_2} = m_2\vec{g} + \vec{F}_{02} + \vec{F}'_{12} + \vec{F}''_{12}.$$

$$m_1\vec{a}_{C_1} = m_1\vec{g} + \vec{F}_{01} + \vec{F}'_{21} + \vec{F}''_{21} = m_1\vec{g} + \vec{F}_{01} - \vec{F}'_{12} - \vec{F}''_{12}.$$

$$\breve{J}_2 \cdot \vec{\alpha}_2 + \vec{\omega}_2 \times \breve{J}_2 \cdot \vec{\omega}_2 = \vec{M}_{12} + \overrightarrow{C_2A} \times \vec{F}'_{12} + \overrightarrow{C_2B} \times \vec{F}''_{12}.$$

$$\breve{J}_1 \cdot \vec{\alpha}_1 + \vec{\omega}_1 \times \breve{J}_1 \cdot \vec{\omega}_1 = \vec{M}_{01} + \overrightarrow{C_1O} \times \vec{F}_{01} - \vec{M}_{12} - \overrightarrow{C_1A} \times \vec{F}'_{12} - \overrightarrow{C_1B} \times \vec{F}''_{12}.$$

Angular velocities and accelerations:

$$\vec{\omega}_1 = \dot{\phi}\vec{u}_3^{(1)}, \quad \vec{\alpha}_1 = D_0\vec{\omega}_1 = D_1\vec{\omega}_1 = \ddot{\phi}\vec{u}_3^{(1)}.$$

$$\vec{\omega}_2 = \dot{\theta}\vec{u}_1^{(1)} + \dot{\phi}\vec{u}_3^{(1)}, \quad \vec{\alpha}_2 = D_0\vec{\omega}_2 = D_1\vec{\omega}_2 + \vec{\omega}_1 \times \vec{\omega}_2 = \ddot{\theta}\vec{u}_1^{(1)} + \dot{\phi}\dot{\theta}\vec{u}_2^{(1)} + \ddot{\phi}\vec{u}_3^{(1)}.$$

Mass center accelerations:

$$\vec{a}_{C_1} = D_0^2[c_1\vec{u}_1^{(1)}] = (c_1\ddot{\phi})\vec{u}_2^{(1)} - (c_1\dot{\phi}^2)\vec{u}_1^{(1)}.$$

$$\vec{v}_{C_2} = D_0[d_2\vec{u}_1^{(1)} - c_2\vec{u}_3^{(2)}] = D_0[d_2\vec{u}_1^{(1)} + (c_2 s\theta)\vec{u}_2^{(1)} - (c_2 c\theta)\vec{u}_3^{(1)}],$$

$$\vec{v}_{C_2} = D_1[d_2\vec{u}_1^{(1)} + (c_2 s\theta)\vec{u}_2^{(1)} - (c_2 c\theta)\vec{u}_3^{(1)}] + \vec{\omega}_1 \times [d_2\vec{u}_1^{(1)} + (c_2 s\theta)\vec{u}_2^{(1)} - (c_2 c\theta)\vec{u}_3^{(1)}],$$

$$\vec{v}_{C_2} = -(c_2\dot{\phi}s\theta)\vec{u}_1^{(1)} + (d_2\dot{\phi} + c_2\dot{\theta}c\theta)\vec{u}_2^{(1)} + (c_2\dot{\theta}s\theta)\vec{u}_3^{(1)}.$$

$$\vec{a}_{C_2} = D_0\vec{v}_{C_2} = D_1\vec{v}_{C_2} + \vec{\omega}_1 \times \vec{v}_{C_2},$$

$$\vec{a}_{C_2} = -(c_2\ddot{\phi}s\theta + d_2\dot{\phi}^2 + 2c_2\dot{\phi}\dot{\theta}c\theta)\vec{u}_1^{(1)} + [d_2\ddot{\phi} + c_2\ddot{\theta}c\theta - c_2(\dot{\phi}^2 + \dot{\theta}^2)s\theta]\vec{u}_2^{(1)}$$
$$+ (c_2\ddot{\theta}s\theta + c_2\dot{\theta}^2 c\theta)\vec{u}_3^{(1)}.$$

Gravity components:

$$\vec{g} = -g\,\vec{u}_3^{(1)}.$$

Force and moment components:

$$\vec{F}_{01} = \vec{u}_1^{(1)}F_{011} + \vec{u}_2^{(1)}F_{012} + \vec{u}_3^{(1)}F_{013}.$$

$$\vec{F}_{02} = F\vec{u}_2^{(2)} = F[\vec{u}_2^{(1)}c\theta + \vec{u}_3^{(1)}s\theta] = \vec{u}_2^{(1)}(Fc\theta) + \vec{u}_3^{(1)}(Fs\theta).$$

$$\vec{F}'_{12} = \vec{u}_2^{(1)}F'_{122} + \vec{u}_3^{(1)}F'_{123}, \quad \vec{F}''_{12} = \vec{u}_1^{(1)}F_{121} + \vec{u}_2^{(1)}F''_{122} + \vec{u}_3^{(1)}F''_{123}.$$

$$\vec{M}_{01} = \vec{u}_1^{(1)}M_{011} + \vec{u}_2^{(1)}M_{012} - \vec{u}_3^{(1)}k_{01}\phi.$$

$$\vec{M}_{12} = -\vec{u}_1^{(1)}b_{12}\dot{\theta}.$$

$$\overrightarrow{C_1O} \times \vec{F}_{01} = [-c_1\vec{u}_1^{(1)}] \times [\vec{u}_1^{(1)}F_{011} + \vec{u}_2^{(1)}F_{012} + \vec{u}_3^{(1)}F_{013}] = \vec{u}_2^{(1)}(c_1F_{013}) - \vec{u}_3^{(1)}(c_1F_{012}).$$

$$\overrightarrow{C_1A} \times \vec{F}'_{12} = -(e_2 - d_2 + c_1)\vec{u}_1^{(1)} \times [\vec{u}_2^{(1)}F'_{122} + \vec{u}_3^{(1)}F'_{123}]$$
$$= (e_2 - d_2 + c_1)[\vec{u}_2^{(1)}F'_{123} - \vec{u}_3^{(1)}F'_{122}].$$

$$\overrightarrow{C_1B} \times \vec{F}''_{12} = (e_2 + d_2 - c_1)\vec{u}_1^{(1)} \times [\vec{u}_1^{(1)}F_{121} + \vec{u}_2^{(1)}F''_{122} + \vec{u}_3^{(1)}F''_{123}]$$
$$= (e_2 + d_2 - c_1)[\vec{u}_3^{(1)}F''_{122} - \vec{u}_2^{(1)}F''_{123}].$$

$$\overrightarrow{C_2A} \times \vec{F}'_{12} = [\vec{u}_3^{(1)}(c_2c\theta) - \vec{u}_2^{(1)}(c_2s\theta) - e_2\vec{u}_1^{(1)}] \times [\vec{u}_2^{(1)}F'_{122} + \vec{u}_3^{(1)}F'_{123}]$$
$$= -(c_2F'_{122}c\theta + c_2F'_{123}s\theta)\vec{u}_1^{(1)} + (e_2F'_{123})\vec{u}_2^{(1)} - (e_2F'_{122})\vec{u}_3^{(1)}.$$

$$\overrightarrow{C_2B} \times \vec{F}''_{12} = [\vec{u}_3^{(1)}(c_2c\theta) - \vec{u}_2^{(1)}(c_2s\theta) + e_2\vec{u}_1^{(1)}] \times [\vec{u}_1^{(1)}F_{121} + \vec{u}_2^{(1)}F''_{122} + \vec{u}_3^{(1)}F''_{123}]$$
$$= -(c_2F''_{122}c\theta + c_2F''_{123}s\theta)\vec{u}_1^{(1)} + (c_2F_{121}c\theta - e_2F''_{123})\vec{u}_2^{(1)} + (c_2F_{121}s\theta + e_2F''_{122})\vec{u}_3^{(1)}.$$

Inertia moment components:

$$\breve{J}_1 \cdot \vec{\alpha}_1 = \vec{u}_3^{(1)} J_1 \ddot{\phi} .$$

$$\vec{\omega}_1 \times \breve{J}_1 \cdot \vec{\omega}_1 = [\dot{\phi}\vec{u}_3^{(1)}] \times [J_1 \dot{\phi}\vec{u}_3^{(1)}] = \vec{0} .$$

$$\breve{J}_2 \cdot \vec{\alpha}_2 = \vec{u}_1^{(1)}(J_{21}\ddot{\theta}) + \vec{u}_2^{(1)}[(J_{22} - J_{23})\ddot{\phi} s\theta c\theta + (J_{22}c^2\theta + J_{23}s^2\theta)\dot{\phi}\dot{\theta}]$$
$$+ \vec{u}_3^{(1)}[(J_{22}s^2\theta + J_{23}c^2\theta)\ddot{\phi} + (J_{22} - J_{23})\dot{\phi}\dot{\theta} s\theta c\theta].$$

$$\vec{\omega}_2 \times \breve{J}_2 \cdot \vec{\omega}_2 = -\vec{u}_1^{(1)}(J_{22} - J_{23})\dot{\phi}^2 s\theta c\theta - \vec{u}_2^{(1)}(J_{22}s^2\theta + J_{23}c^2\theta - J_{21})\dot{\phi}\dot{\theta}$$
$$+ \vec{u}_3^{(1)}(J_{22} - J_{23})\dot{\phi}\dot{\theta} s\theta c\theta .$$

Scalar Newton-Euler equations:

$$-m_2(c_2\ddot{\phi} s\theta + d_2\dot{\phi}^2 + 2c_2\dot{\phi}\dot{\theta} c\theta) = F_{121} .$$

$$m_2[d_2\ddot{\phi} + c_2\ddot{\theta} c\theta - c_2(\dot{\phi}^2 + \dot{\theta}^2)s\theta] = Fc\theta + F'_{122} + F''_{122} .$$

$$m_2(c_2\ddot{\theta} s\theta + c_2\dot{\theta}^2 c\theta) = -m_2 g + Fs\theta + F'_{123} + F''_{123} .$$

$$-m_1 c_1 \dot{\phi}^2 = F_{011} - F_{121} .$$

$$m_1 c_1 \ddot{\phi} = F_{012} - F'_{122} - F''_{122} .$$

$$0 = -m_1 g + F_{013} - F'_{123} - F''_{123} .$$

$$J_{12}\ddot{\theta} - (J_{22} - J_{23})\dot{\phi}^2 s\theta c\theta = -b_{12}\dot{\theta} - c_2(F'_{122} + F''_{122})c\theta - c_2(F'_{123} + F''_{123})s\theta .$$

$$(J_{22} - J_{23})\ddot{\phi} s\theta c\theta + [J_{21} + (J_{22} - J_{23})(c^2\theta - s^2\theta)]\dot{\phi}\dot{\theta} = e_2(F'_{123} - F''_{123}) + c_2 F_{121} c\theta .$$

$$(J_{22}s^2\theta + J_{23}c^2\theta)\ddot{\phi} + 2(J_{22} - J_{23})\dot{\phi}\dot{\theta} s\theta c\theta = e_2(F''_{122} - F'_{122}) + c_2 F_{121} s\theta .$$

$$0 = M_{011} + b_{12}\dot{\theta} .$$

$$0 = M_{012} + c_1 F_{013} - (e_2 - d_2 + c_1)F'_{123} + (e_2 + d_2 - c_1)F''_{123} .$$

$$J_1\ddot{\phi} = -k_{01}\phi - c_1 F_{012} + (e_2 - d_2 + c_1)F'_{122} - (e_2 + d_2 - c_1)F''_{122} .$$